EVO-DM50
Dual-Module

TECHNICAL DETAILS

Material	Aluminium (ground)
Surface	black, red, blue, green, gold, ESD
Positional Tolerance Fitting Bores	± 0,01 mm
Positional Tolerance Bores	± 0,1 mm

MODULE DESCRIPTION

Module with fitting and mounting bores for precise attachment of components in position. The two-piece structure enables the element quickliy to be mounted to a two-column system also at a later date.

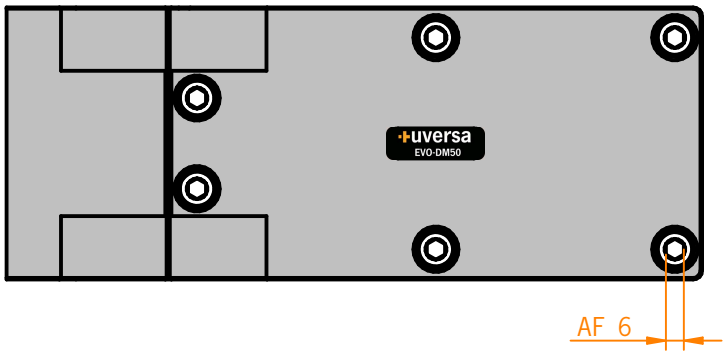

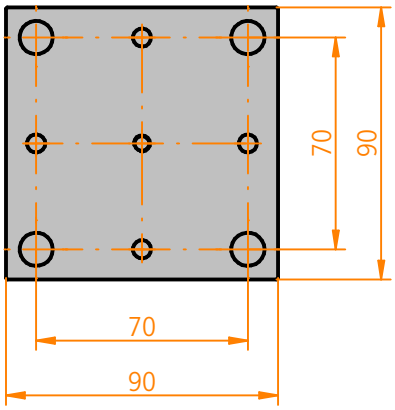

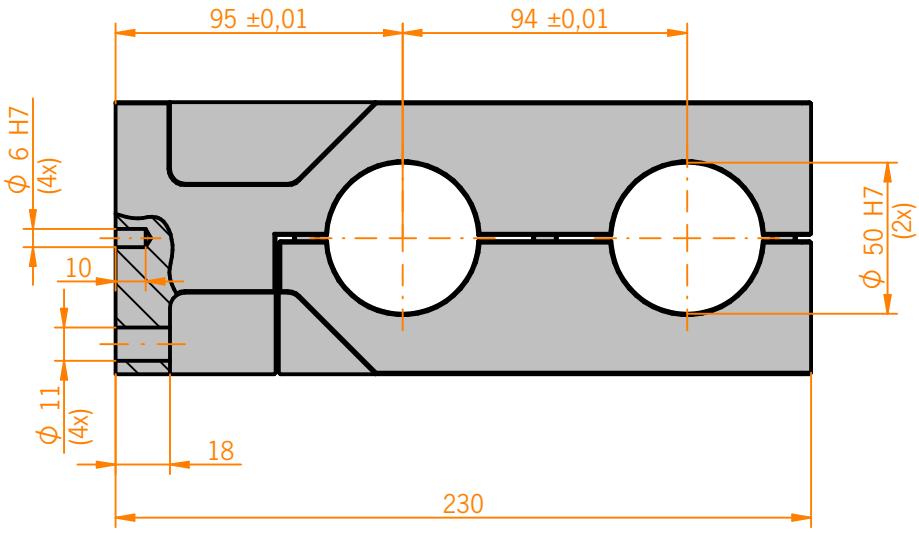

Customized items are available upon request.

© Copyright reserved.
Products from www.uversa.de are supplied in the name and for the account of KonTec Maschinenbau GmbH.

UVERSA SERVICE 08321 / 220 98-40
info@uversa.de
www.uversa.de