VARO-JM30
Adjusting-Module

Travel in X and Y ±3 mm

TECHNICAL DETAILS

Material	Aluminium (milled)
Surface	black, red, blue, green, gold, ESD
Positional Tolerance Fitting Bores	± 0,01 mm
Positional Tolerance Bores	± 0,1 mm
Carriage Guide	Greased (DIN EN 51825 KP2K-30)

MODULE DESCRIPTION

Module for exact adjustment of elements in the xy plane. This way, it is possible to compensate for manufacturing tolerances in the mechanical structure. The element may be attached on working surfaces or integrated in assemblies. Suitable for mono and dual pedestals.

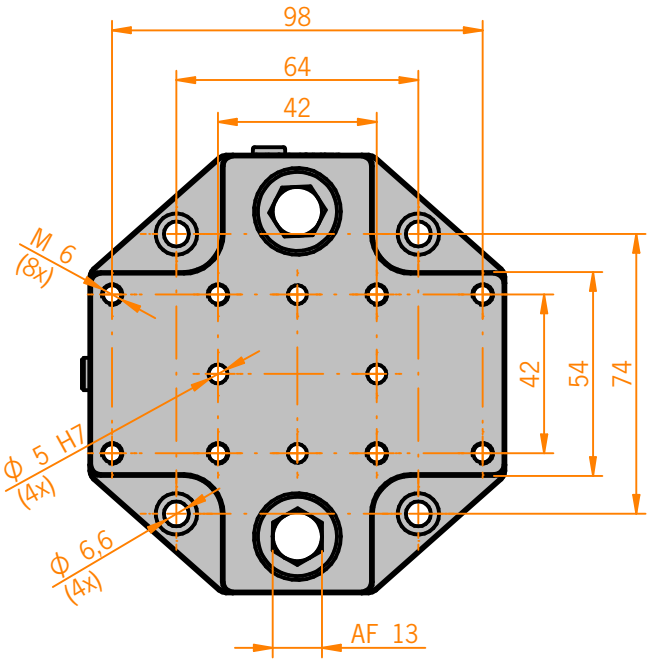

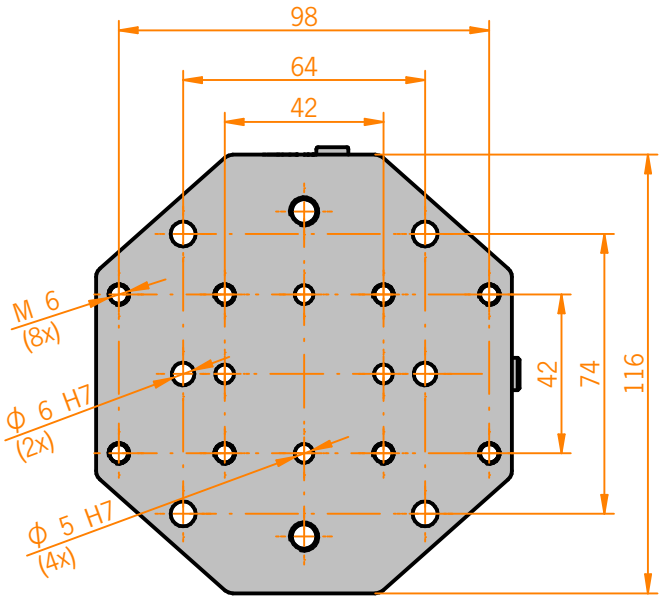

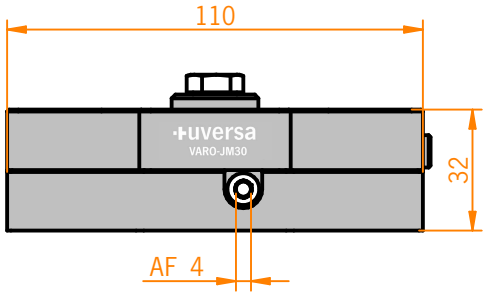

Customized items are available upon request.

© Copyright reserved.
Products from www.uversa.de are supplied in the name and for the account of KonTec Maschinenbau GmbH.

UVERSA SERVICE 08321 / 220 98-40
info@uversa.de
www.uversa.de